VECSET Block Diagram

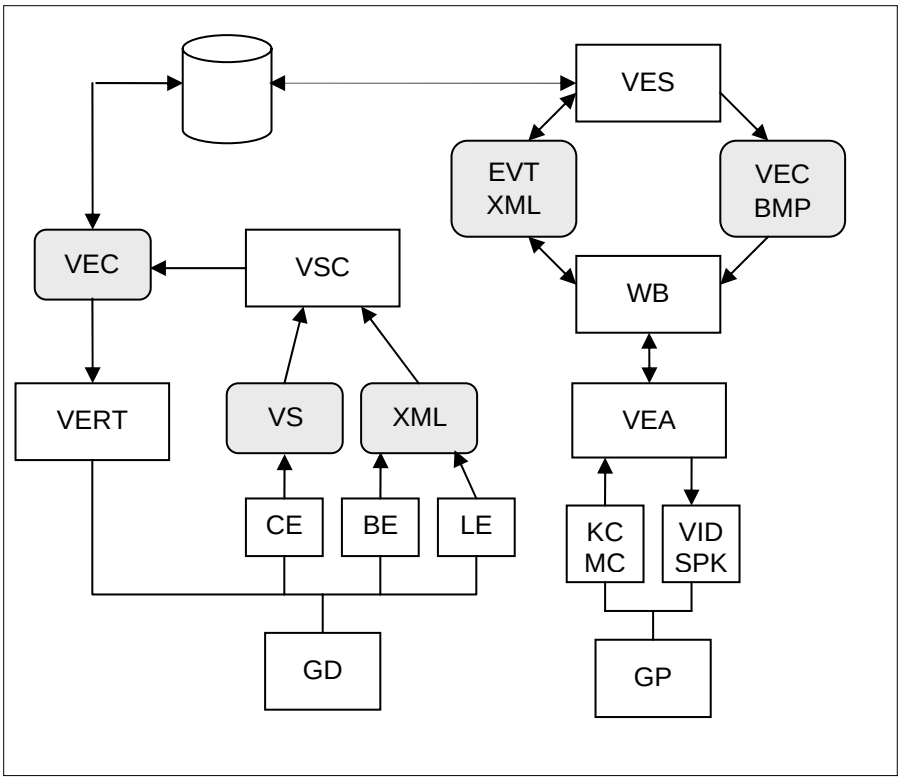

BE	Board Editor
BMP	Bitmaps
CE	Code Editor
EVT	Events
GD	Game Designer
GP	Game Player
KC	Key Clicks
LE	Level Editor
MC	Mouse Clicks
SPK	Speaker
VEA	Virtual Env. Applet
VEC	Virtual Env. Code
VERT	Virtual Env. Run-Time
VES	Virtual Env. Server
VID	Video
VS	Vecscript
VSC	Vecscript Compiler
WB	Web Browser
XML	Extensible Markup Lang.